| Dimension Drawing - MultiPlus-II | |
|---|---|
| valid for up to and including serial number HQ2320 | |
| PMP482505010 | MultiPlus-II 48/5000/70-50 230V |

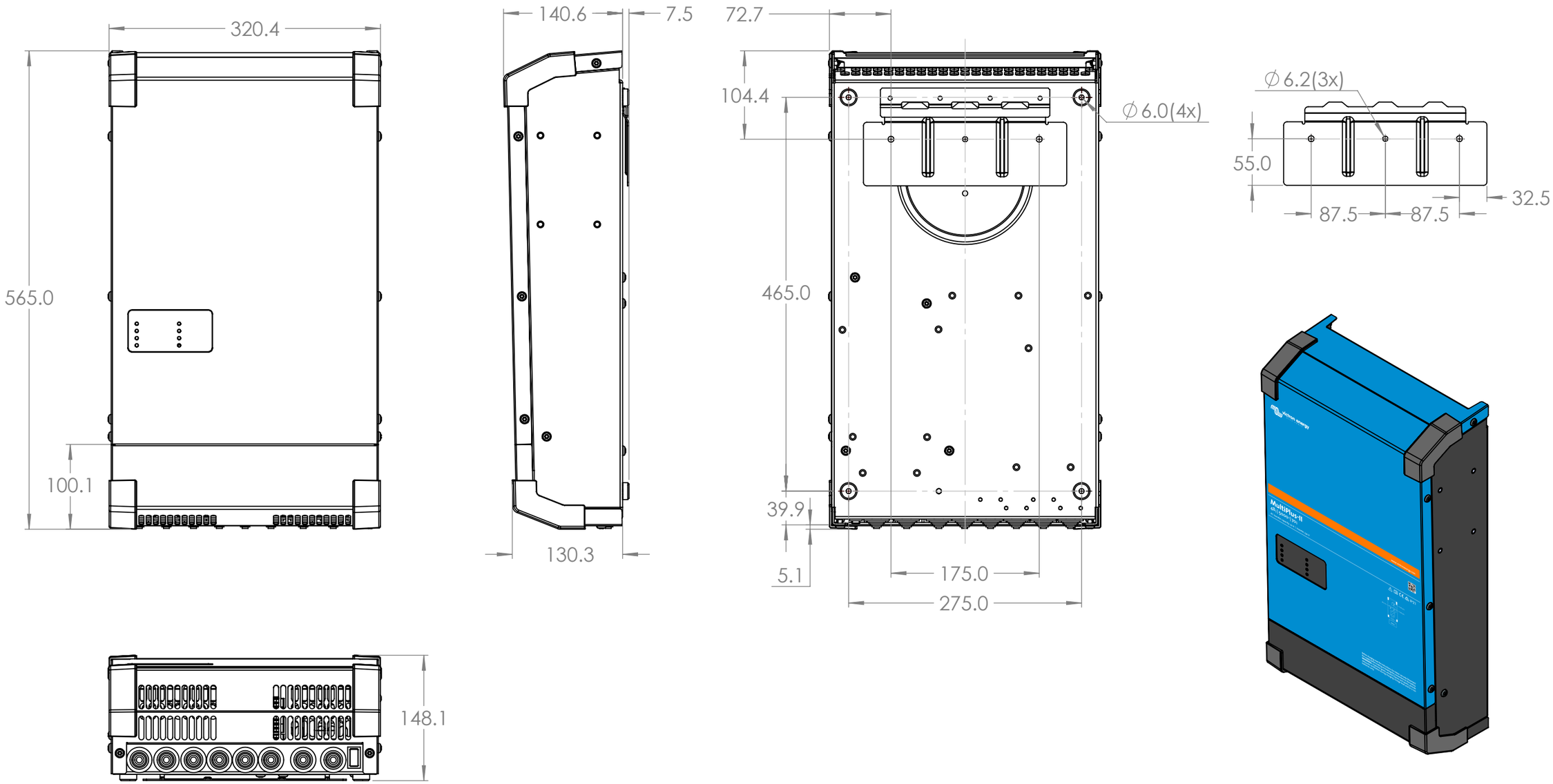


Dimensions in mm

victron energy
BLUE POWER

Rev01